Reliable Wheel Products

SuperLift Jack SL-200-38

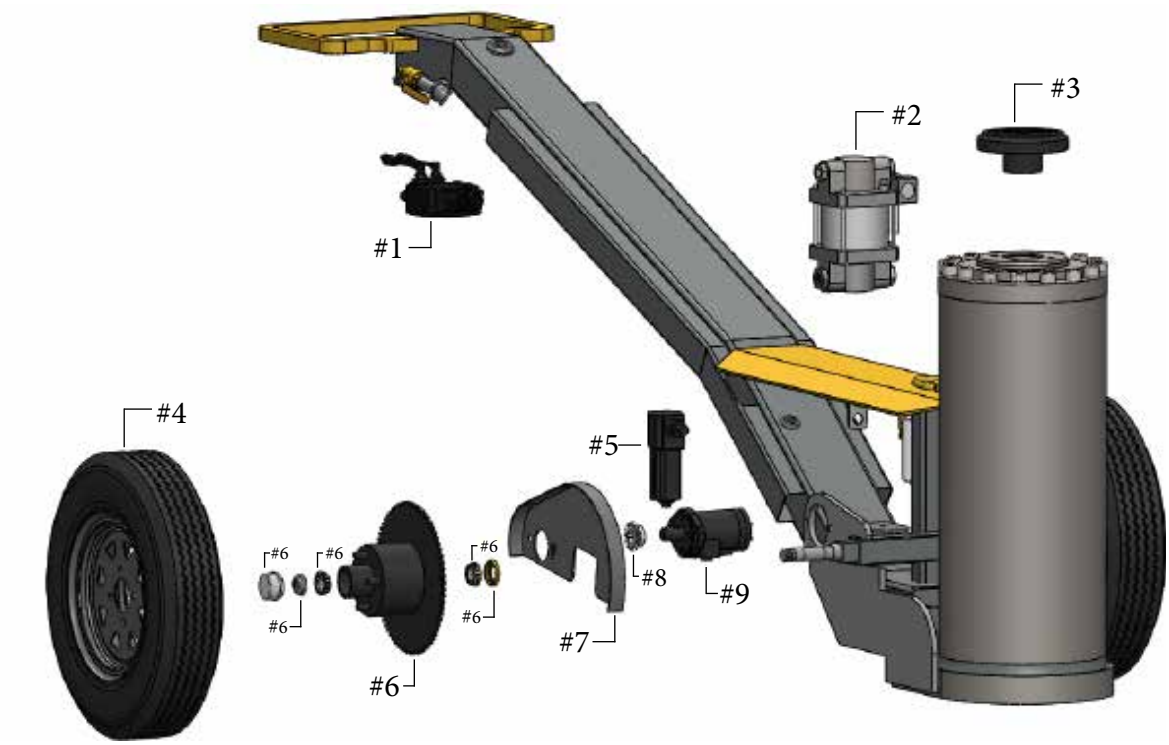

ITEM #	PART #	DESCRIPTION	QTY
1	SLP-CV-DUAL	Control Valve	1
2	HPS-35-D	Pump (Refer Pump Section)	1
3	MACH-7-M-SPIG	Load Cap	1
4	TWA-12-4H	Tire and Wheel Assembly	2
5	HYD-WS-AD3	Water Separator	1
6	TWA-4H-HUBSPK	Hub and Sprocket	1
7	SLP-GUARD-RIGHT	Right Hand Chain Guard	1
8	SLP-40-12-1SPK	Small Sprocket	1
9	SLP-40-12-1SPK	Motor Drive	1
10	SLP-40CHAIN	Replacement Chain	1

Reliable Wheel Products

SuperLift Jack SL-200-38

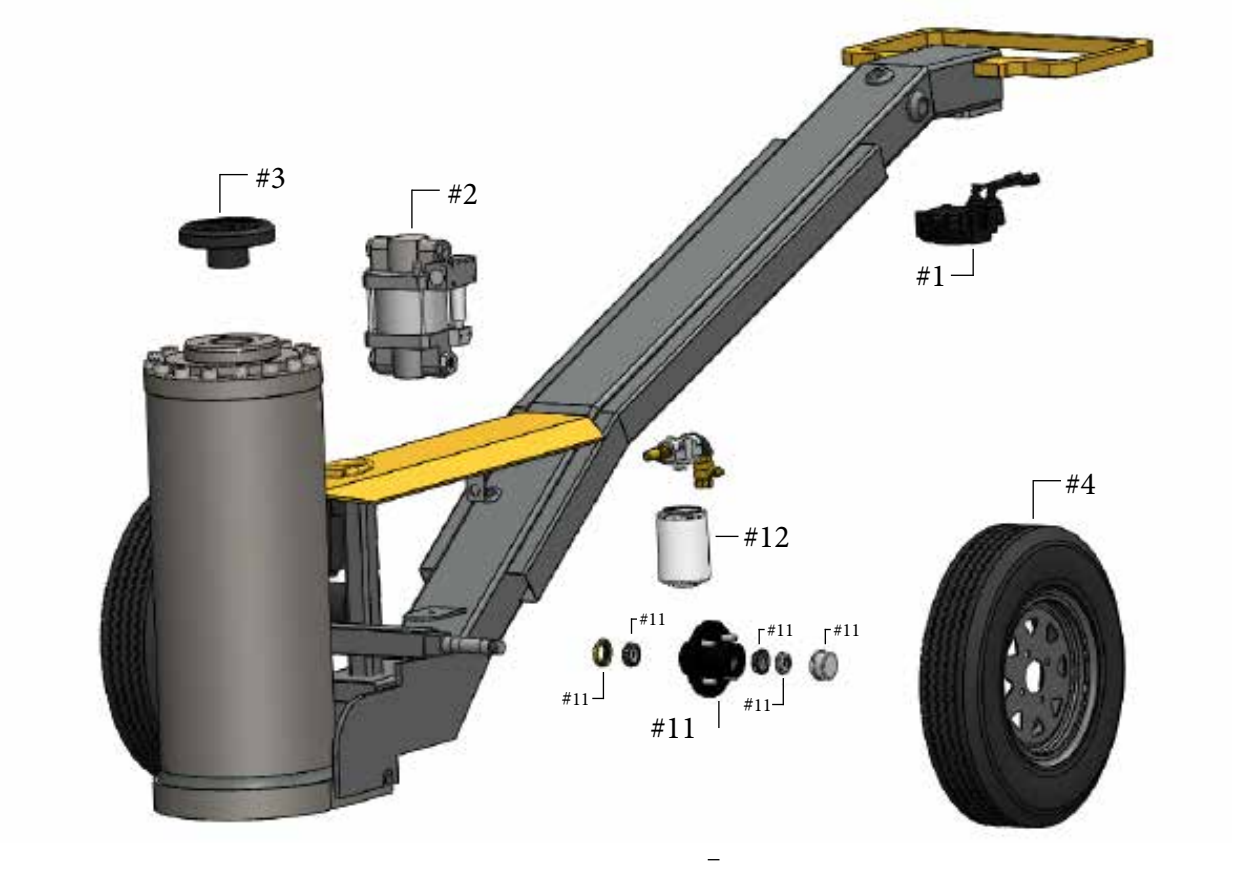

ITEM #	PART #	DESCRIPTION	QTY
1	SLP-CV-DUAL	Control Valve	1
2	HPS-35-D	Pump (Refer Pump Section)	1
3	MACH-7-M-SPIG	Load Cap	1
4	TWA-12-4H	Tire and Wheel Assembly	2
11	TWA-4H-HUB	4 Hole Hub	1
12	HYD-SLF-20C	Oil Filter	1