www.reliablewheel.com

SUPERLIFT

Left Side Parts

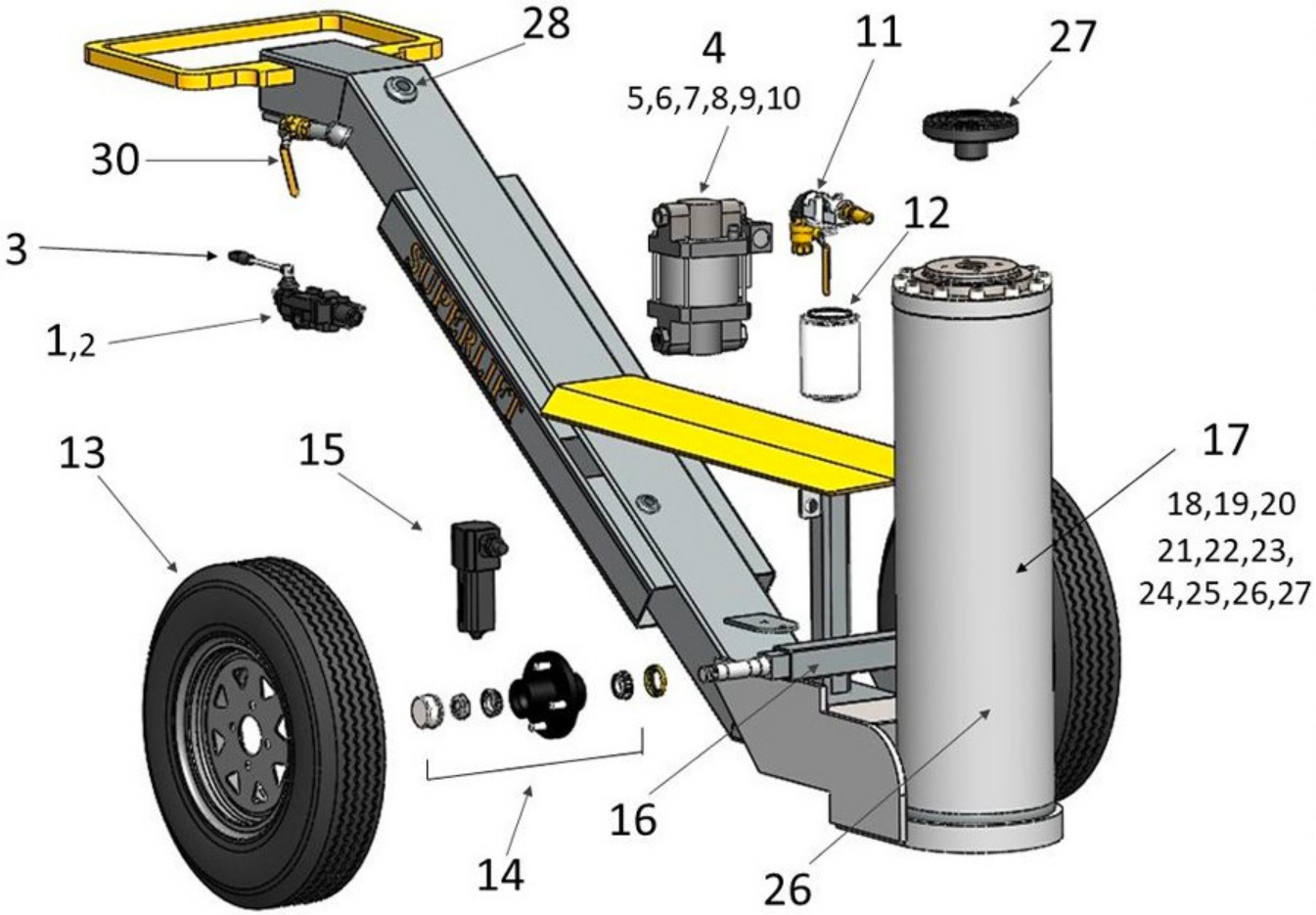

Reliable Wheel Products

SL-150-38

www.reliablewheel.com
www.reliablewheel.com
www.reliablewheel.com
www.reliablewheel.com

www.reliablewheel.com

SUPERLIFT

Right Side Parts

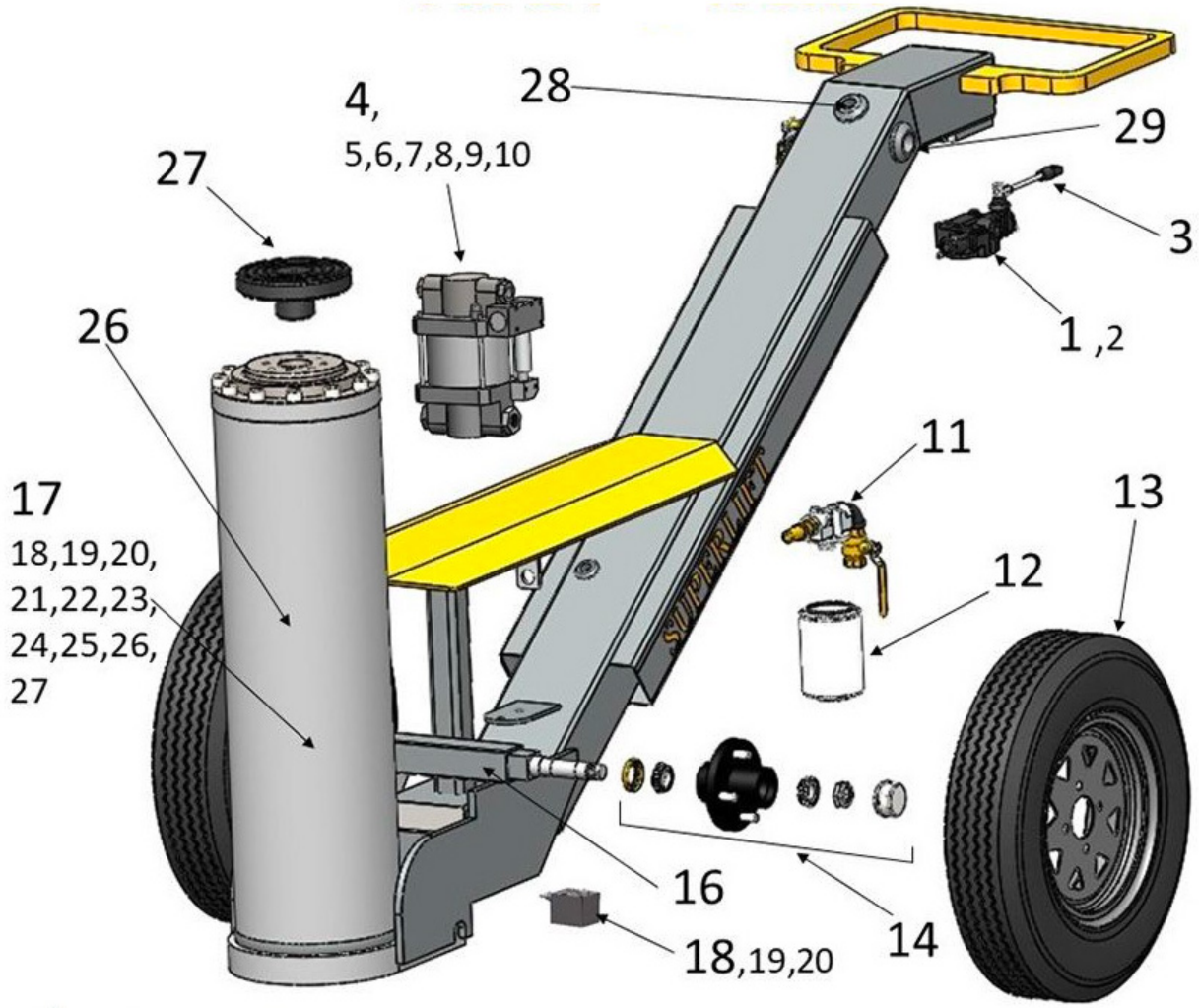

Reliable Wheel Products

SL-150-38

www.reliablewheel.com
www.reliablewheel.com
www.reliablewheel.com

www.reliablewheel.com

SUPERLIFT

Cylinder Parts

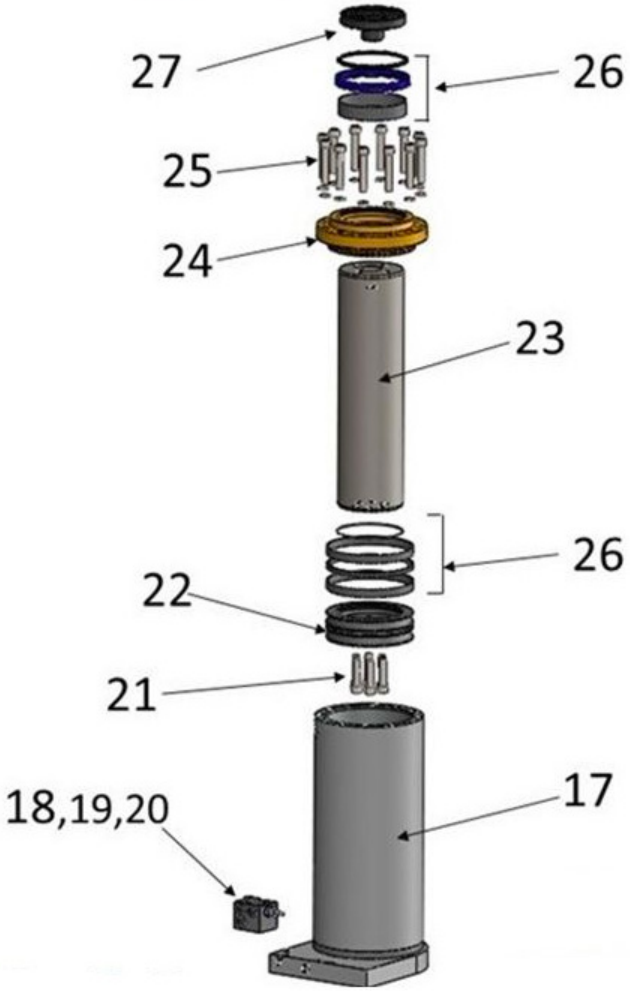

Reliable Wheel Products

SL-150-38

www.reliablewheel.com
www.reliablewheel.com
www.reliablewheel.com

SUPERLIFT

Jack Parts List SL-150-38

#	DESCRIPTION	PART #	Qty
1	Control Valve	**SLP-CV-SINGLE**	1
2	Control Valve Cartridge	**SLP-CV-SL-MREL**	1
3	Control Valve Handle	**SLP-CV-LEVER**	2
4	Pump / Air / Hydraulic	**HPS-60-D**	1
5	HPS Pump Spool Valve	**PR-SVA-S-PUMP**	1
6	HPS Pump Spool Repair Kit	**PR-540113**	1
7	HPS Pump Air Drive Section Repair Kit	**PR-540233**	1
8	HPS Pump Hydraulic Section Repair Kit	**PR-54040048**	1
9	HPS-Pump Check Valve Repair Kit	**PR-CHK-HPS-60-D**	1
10	HPS-Pump Muffler	**PR-160104-R**	1
11	Filter Head Assembly	**SLP-OFA**	1
12	Oil Filter	**HYD-SLF-20C**	1
13	Tire / Wheel	**TWA-12-4H**	2
14	Hub Assembly / Bearings	**TWA-4H-HUB-SET**	2
15	Air / Water Separator	**HYD-WS-AD3**	1
16	Axel / Weld On	**SLP-AXL-REG**	1
17	Cylinder Complete	**SLP-CYL-150-38**	1
18	Cylinder Safety Block	**SLP-SB-2711**	1
19	Cylinder Safety Block Check Cartridge	**SLP-SB-CHECK**	1
20	Cylinder Safety Block Relief Cartridge	**SLP-SB-RELIEF**	1
21	Cylinder Piston Bolts	**FAS-M16.60**	6
22	Cylinder Piston	**MACH-SLP-CYL-150-PISTON**	1
23	Cylinder Rod	**MACH-SLP-CYL-150-38-ROD**	1
24	Cylinder Head Gland	**MACH-SLP-CYL-150-HEADGLAND**	1
25	Cylinder Head Gland Bolts	**FAS-M16.65**	12
26	Cylinder Seal Kit	**SK-SL-6**	1
27	Load Cap	**MACH-6M-SPIG**	1
28	Tank Breather	**HYD-34-BREATHERCAP**	1
29	Tank Oil Level Sight Glass	**HYD-1-SIGHTGLASS**	1
30	Air Supply Shut Off Valve	**HYD-34-BV**	1